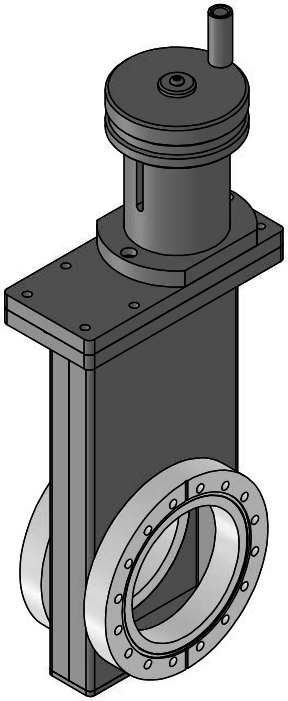

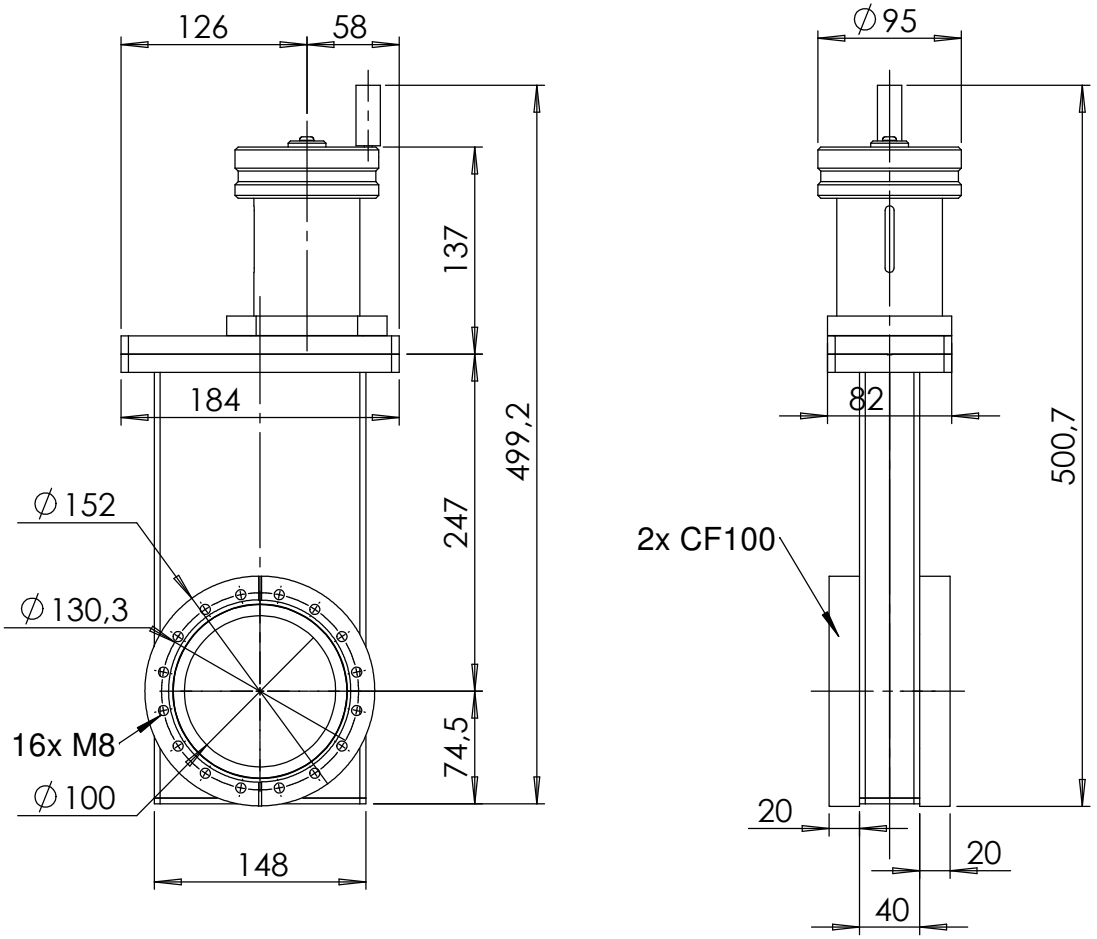

Bemerkungen
(Remarks)

All informations provided in this drawing is considered to be confidential, proprietary and secret information. It is intended only for the use of individual or entity to whom it is sent. Individdual or entity agrees to not disseminate or copy this information to anyone other than originally specified without the written consent Allectra GmbH.

Freimaßtoleranz (Standard Tolerance)

Maßstab (Scale): 1:5

Rauheit (Roughness)

europ.Projektion

Material, Standard Oberfläche (Treatment)

Kanten (edges)

	Datum	Name
Design	20.01.2022	AD
Drawn	20.01.2022	AD
Check		

Bezeichnung (Title)

DN100CF gate valve, manual

Gewicht (weight): g

Page: 1 Pages: 1

Zeichnungsnummer (Drawing No.): 516-GV-C100

Revision

Index	Modification	Date	Name

allectra

Datei (File) C:\PDM-Store\C:\PDM-Store\

Format A4