POS-NR.	DESCRIPTION	MATERIAL	QTY
1	modified flange DN100 ISO-K	1.4301 (304)	1
2	coaxial f/t BNC double sided floating shield	Stainless Steel	6

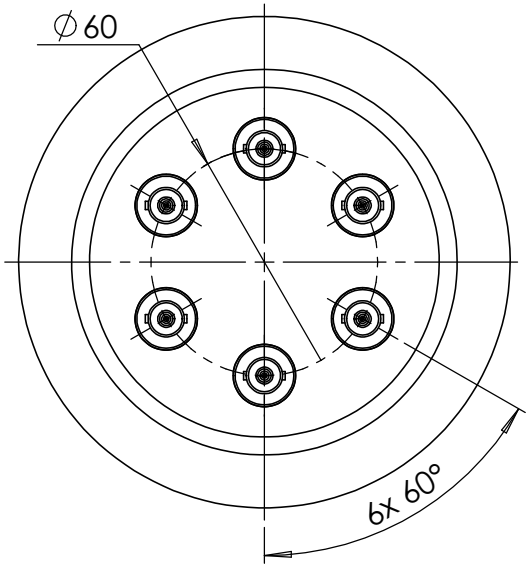

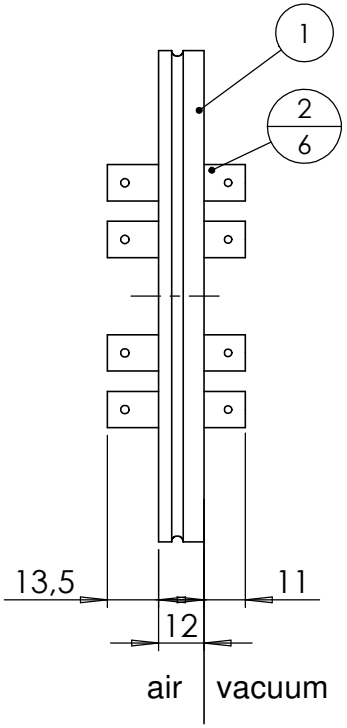

Air side connectors included

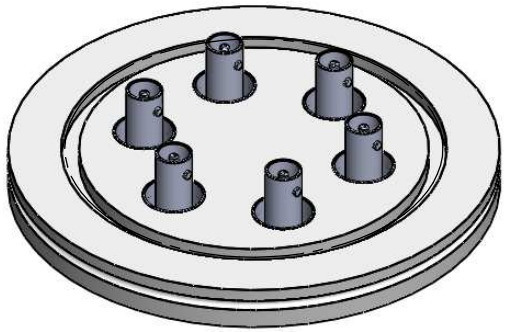

Bemerkungen
(Remarks)

All informations provided in this drawing is considered to be confidential, proprietary and secret information. It is intended only for the use of individual or entity to whom it is sent. Individual or entity agrees to not disseminate or copy this information to anyone other than originally specified without the written consent Allectra GmbH.

Freimaßtoleranz
(Standard Toleranz)

Maßstab
(Scale)
1:2

Rauheit (Rougness)

europ.Projektion

Material, Standard
Oberfläche
(Treatment)

Kanten (edges)

	Datum	Name
Design	07.09.2021	JB
Drawn	07.09.2021	JB
Check		

Bezeichnung
(Title)
6 off BNCDF50 f/t
on flange DN100 ISO-K

Gewicht
(weight)
g
1046.21

Page: 1
Pages: 1

allectra

Zeichnungsnummer
(Drawing No.)
242-BNCDF50-ISO100-6

Revision

Index	Modification	Datum	Name

Datei (File) C:\PDMStore\C:\PDMStore\

Format A4