POS-NR.	DESCRIPTION	MATERIAL	QTY
1	modified flange DN40 KF	1.4301 (304)	1
2	coaxial f/t type BNC, 500V, 3A,grounded shield, weldable	Stainless Steel	3

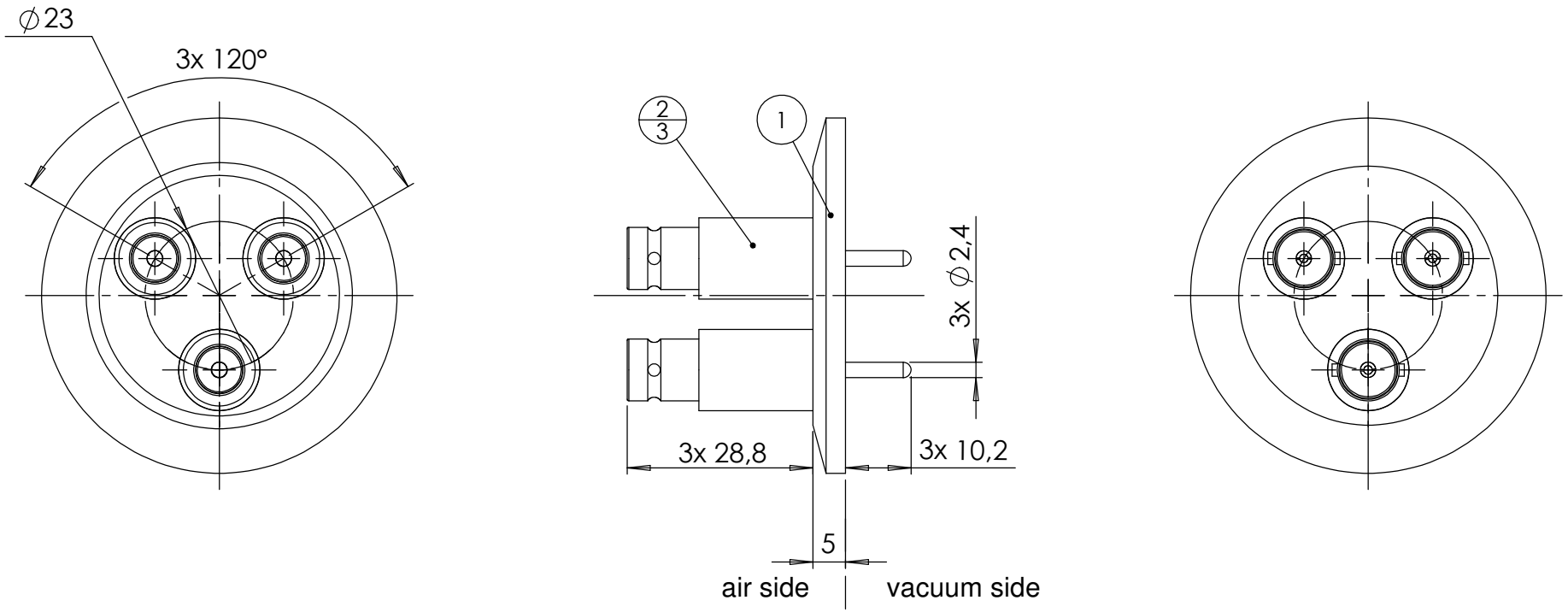

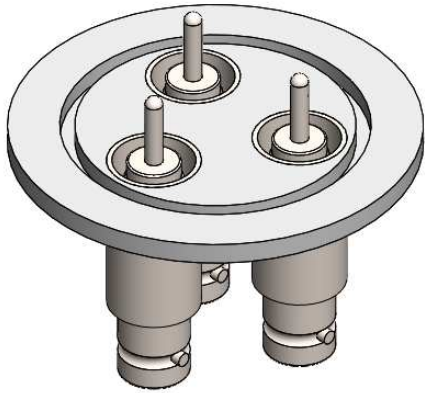

air side connectors are included

Bemerkungen
(Remarks)

All informations provided in this drawing is considered to be confidential, proprietary and secret information. It is intended only for the use of individual or entity to whom it is sent. Individdual or entity agrees to not disseminate or copy this information to anyone other than originally specified without the written consent Allectra GmbH.

Freimaßtoleranz (Standard Toleranz): DIN ISO 2768 f-H

Maßstab (Scale): 1:1

Rauheit (Rougness): Rz 16 (Rz 6.3)

europ.Projektion

Material, Standard
Oberfläche
(Treatment)

Kanten (edges): ±0.1 / ±0.25

	Datum	Name
Design	10.05.2023	AD
Drawn	11.05.2023	AD
Check		

Bezeichnung (Title)

3 off BNC f/t

on flange DN40 KF

Gewicht (weight): g

Page: 1 Pages: 1

Zeichnungsnummer (Drawing No.): 241-BNC-K40-3

Revision

allectra

Index	Modification	Datum	Name

Datei (File) C:\PDMstore\C:\PDMstore\

Format A4