POS-NR.	DESCRIPTION	MATERIAL	QTY
1	front plate for UHV-connector	PEEK	1
2	back plate for UHV-connector	PEEK (Natur)	1
3	Hexagon Nut M2 DIN934	Stainless Steel	2
4	Slotted Cheese Screw 4-40 UNC	1.4301 (X5CrNi18-10)	2
5	Countersunk Screw M2x20	Stainless Steel	2

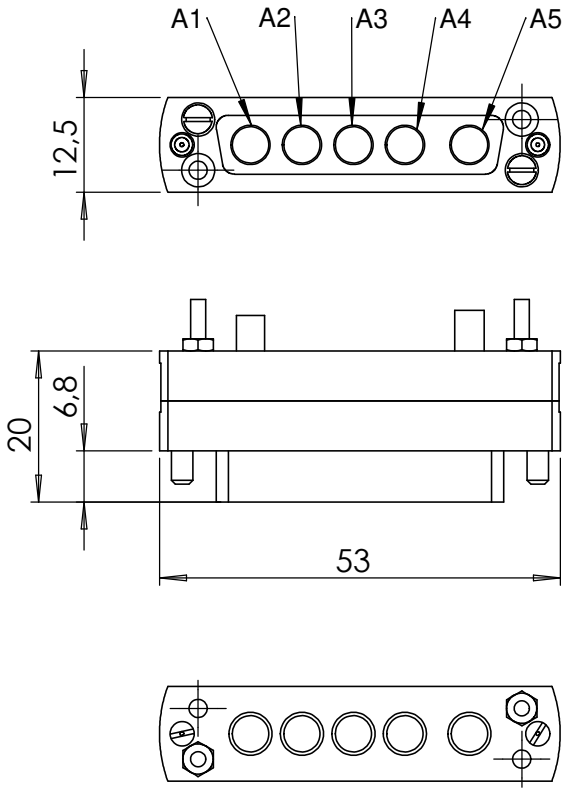

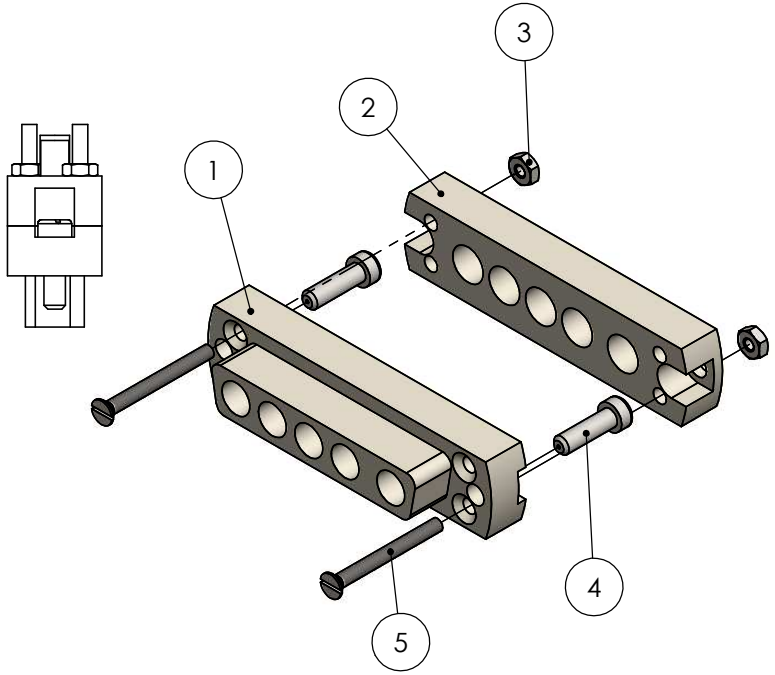

compatibel contacts are not included

contact power
212-POWER-F

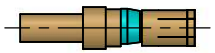

contact coax
212-COAX-F

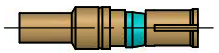

Bemerkungen
(Remarks)

All informations provided in this drawing is considered to be confidential, proprietary and secret information. It is intended only for the use of individual or entity to whom it is sent. Individual or entity agrees to not disseminate or copy this information to anyone other than originally specified without the written consent Allectra GmbH.

Freimaßtoleranz
(Standard Toleranz)

Maßstab
(Scale)
1:1

Rauheit (Rougness)

europ.Projektion

Material, Standard
Oberfläche
(Treatment)

Kanten (edges)

	Datum	Name
Design	27.01.2014	JB
Drawn	25.10.2022	AD
Check		

Bezeichnung
(Title)
UHV connector 5 pin
for COAX and POWER

Gewicht
(weight)
16.64 g

Page: 2
Pages: 3

Zeichnungsnummer
(Drawing No.)
211-FX25-5-PK

Revision

Index	Modification	Datum	Name

allectra

Datei (File) C:\PDMstore\C:\PDMstore\

Format A4

Datei: 211-FX_15_37-PK