POS-NR.	DESCRIPTION	MATERIAL	QTY
1	hexagon Nut M4	Stainless Steel	6
2	lead Glass disk		1
3	union flange DN16	1.4404 (316L)	1
4	WASHER-M4	Stainless Steel	6
5	screw M4x30	Stainless Steel	6

SECTION A-A

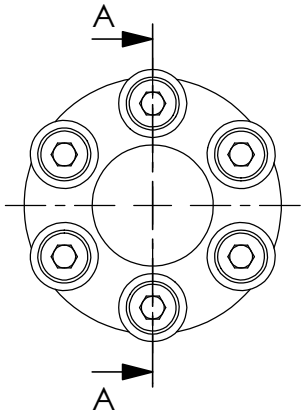

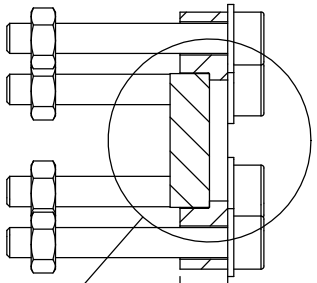

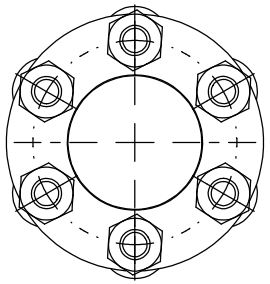

DETAIL X
SCALE 2 : 1

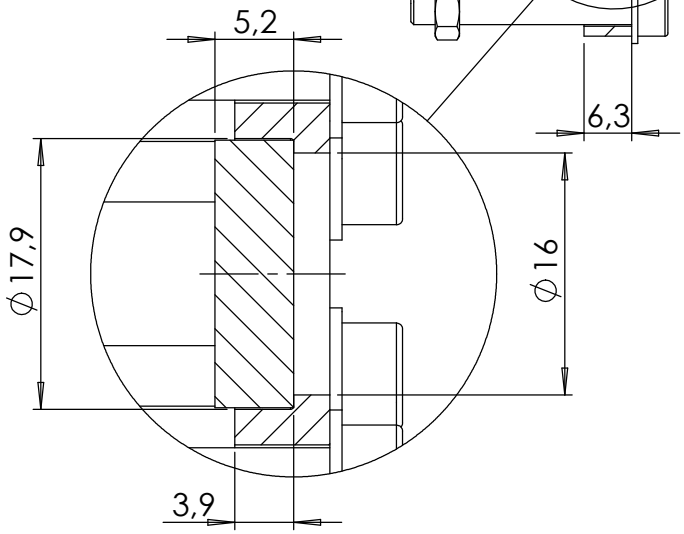

SCALE 1:2

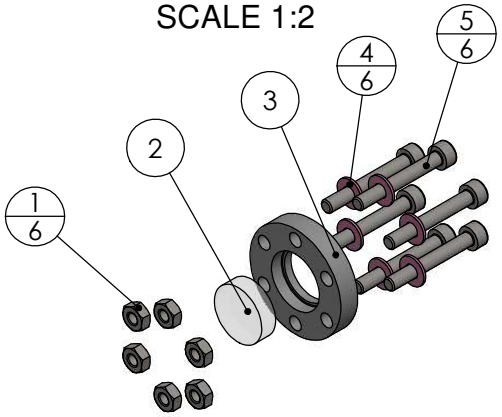

SCALE 1:2

not included

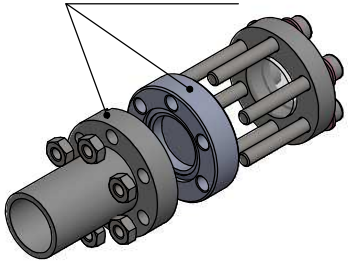

using example

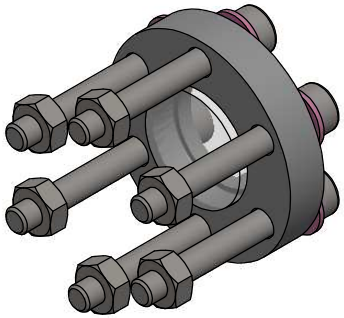

Bemerkungen
(Remarks)

All informations provided in this drawing is considered to be confidential, proprietary and secret information. It is intended only for the use of individual or entity to whom it is sent. Individual or entity agrees to not disseminate or copy this information to anyone other than originally specified without the written consent Allectra GmbH.

Freimaßtoleranz
(Standard Toleranz)

Maßstab
(Scale)
1:1

Rauheit (Rougness)

europ.Projektion

Material, Standard
Oberfläche
(Treatment)

Kanten (edges)

	Datum	Name
Design	16.11.2020	AD
Drawn	16.11.2020	AD
Check		

Bezeichnung
(Title)
lead Glass (protection screen) for flange DN16 CF

Gewicht
(weight)
g
127.12

Page: 1
Pages: 1

Index	Modification	Datum	Name

allectra

Zeichnungsnummer
(Drawing No.)
140-LG-C16

Revision

Datei (File)

Format A4